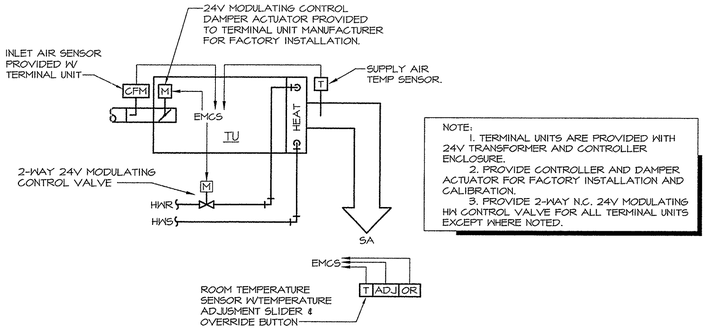

NOTE:
1. TERMINAL UNITS ARE PROVIDED WITH 24V TRANSFORMER AND CONTROLLER ENCLOSURE.
2. PROVIDE CONTROLLER AND DAMPER ACTUATOR FOR FACTORY INSTALLATION AND CALIBRATION.
3. PROVIDE 2-WAY N.C. 24V MODULATING HW CONTROL VALVE FOR ALL TERMINAL UNITS EXCEPT WHERE NOTED.

SINGLE DUCT TERMINAL UNIT

NO SCALE

5 / M9

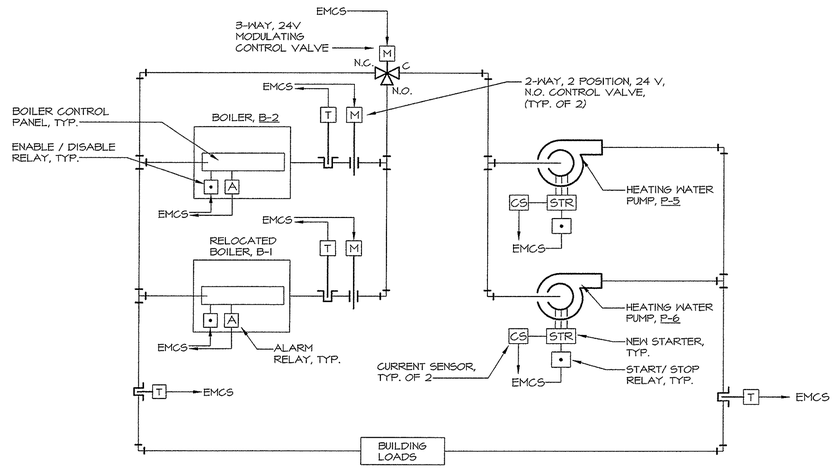

HEATING WATER CONTROL DIAGRAM

NO SCALE

3 / M9

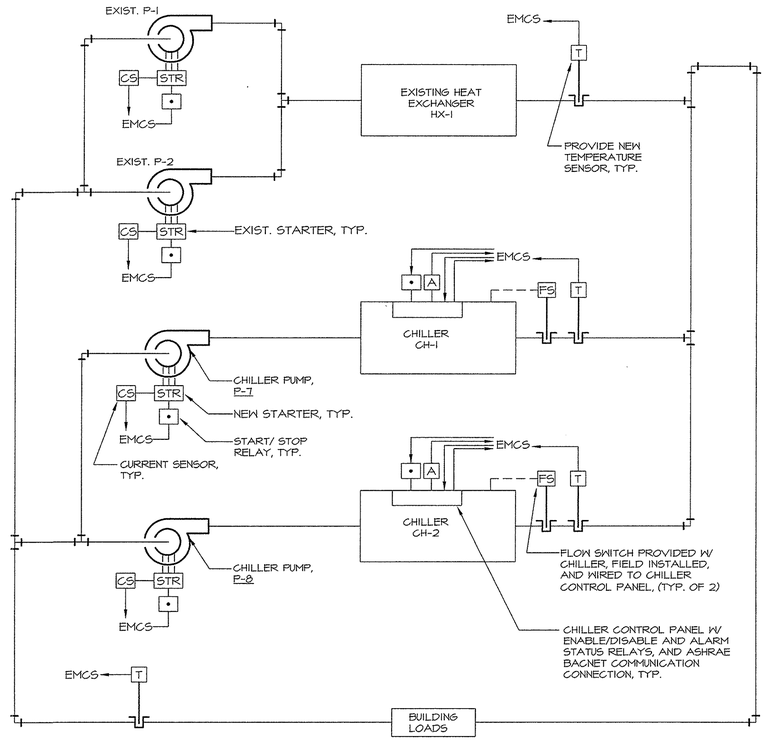

CHILLED WATER CONTROL DIAGRAM

NO SCALE

1 / M9

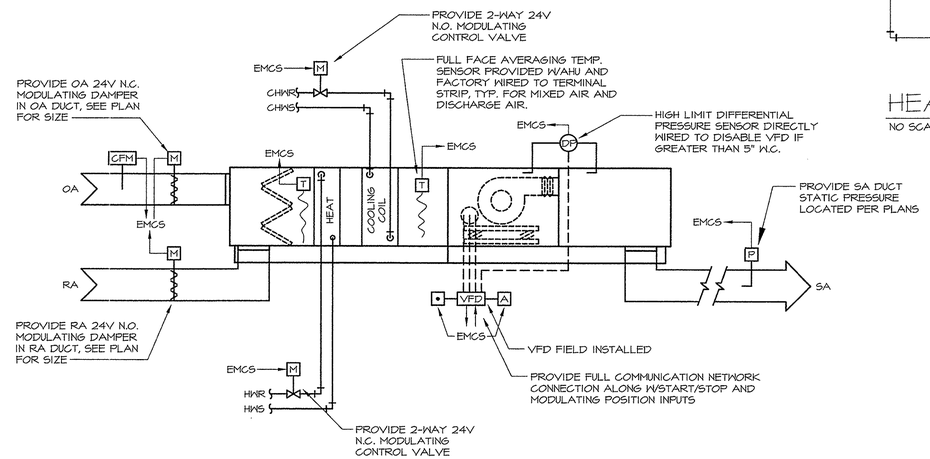

AHU-9 CONTROL SCHEMATIC

NO SCALE

6 / M9

COOLING TOWER CONTROL DIAGRAM

NO SCALE

4 / M9

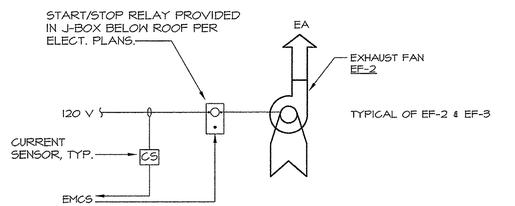

NOTE:
1. ALL OTHER EXHAUST FANS CONTROLLED BY LOCAL SWITCH, SEE ELECTRICAL.

EXHAUST FAN CONTROL DIAGRAM

NO SCALE

2 / M9

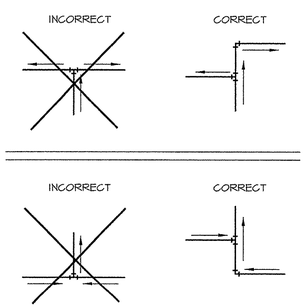

NOTE: NO BULLHEAD TEES ALLOWED

BRANCH PIPING SCHEMATIC

NO SCALE

7 / M9

REV	DATE	DESCRIPTION			BY
APPROVED		STRUCTURAL	ARCHITECTURAL	MECHANICAL	ELECTRICAL

DEPARTMENT OF HEALTH AND HUMAN SERVICES
INDIAN HEALTH SERVICE
ENGINEERING SERVICES DALLAS
DALLAS TEXAS

SELLS HOSPITAL HVAC PHASE III
SELLS, ARIZONA

DRAWN	RCK	CHECKED	KMC	SCALE	AS NOTED	DATE	13 JUNE 2008

JOHNSON SMITTHIPONG & ROSAMOND ASSOCIATES, INC. ARCHITECTURAL

MECHANICAL CONTROL DIAGRAMS

PROJECT NUMBER: TU3SE051H8

DRAWING NUMBER: M9

SHEET

Registered Professional Engineer (Mechanical) CERTIFICATE NO. 25035 KENNETH M. CAWTHORNE Date Signed 6-13-08 ARIZONA, U.S.A.

SMU Mechanical Engineering, LLC
5447 East Fifth Street # 112
Tucson, Arizona 85711
520/327-7611
520/327-0432
#14506